BI5U-Q08-AP6X2-1XOR-RS4

Inductive Sensor

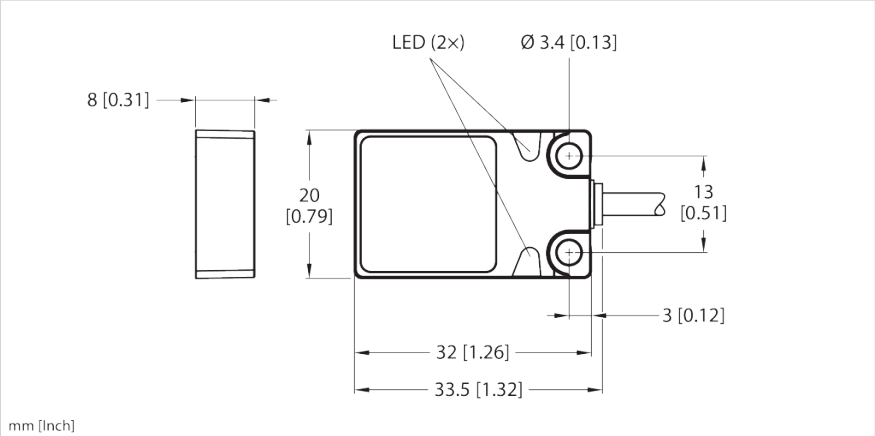

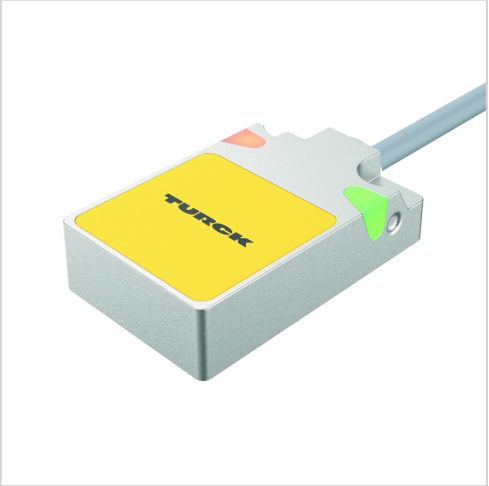

Type designation	BI5U-Q08-AP6X2-1XOR-RS4
Ident-No.	1608921

Technical data

Application area	
Magnetic field immune	Immune to magnetic AC and DC fields
Detection area/measuring range	
Rated switching distance	5 mm
Secured operating distance	≤ (0.81 × Sn) mm
Power supply	
Operating voltage U_B	10...30 VDC
Voltage drop at I_e	≤ 1,8 V
Electrical data	
AC field stability	300 mT_{SS}
No-load current	15 mA
Output function	3-wire, NO contact, PNP
Short-circuit protection	yes/Cyclic
Wire break/reverse polarity protection	yes/Complete
DC field stability	300 mT
DC rated operational current	≤ 200 mA
Insulation class	II
Isolation test voltage	≤ 0,5 kV
Residual current	≤ 0,1 mA

Features

- Rectangular, height 8 mm
- Active face on top
- Metal, Zamak, nickel plated
- Factor 1 for all metals
- Protection class IP68
- Resistant to magnetic fields
- Extended temperature range
- High switching frequency
- DC 3-wire, 10…30 VDC
- NO, PNP output
- Pigtail with M12 × 1 connector

| 10-07-2026 20:07 | Subject to technical changes |

Technical data

Residual ripple	≤ 10 % U_{SS}
Switching frequency	0,25 kHz
Accuracy/deviation	
Hysteresis	3 % v. E...15 % v. E.
Temperature drift	10 %
Repeat accuracy	≤ 2 % v. E.
	≤ ± 15 %, ≤ -25 °C v ≥ +70 °C
Mechanical data	
Design	Rectangular, Q08
Construction type designation	Q08
Dimensions	32 mm x 20 mm x 8 mm
Housing material	Metal, Zamak, Nickel Plated
Active area material	Plastic, PP, yellow
Material coupling nut	metal, CuZn
Electrical connection	Cable with connector, M12 x 1
Number of pins	4
Pressure resistant	no
Mounting conditions	Flush
Cable	
Cable length	1 m
Cable jacket	Orange
Core cross-section	3 x 0,25 mm²
Cable type	LifXX
External Diameter of the Cable	Ø 4 mm
Cable Jacket Material	PVC
Ambient conditions	
Ambient temperature	-30...+85 °C
Pollution degree	3
Shock resistance	30 g (11 ms)
Vibration resistance	55 Hz (1 mm)
Protection class	IP68
Tests/approvals	
MTTF	874 Years acc. to SN 29500 (Ed. 99) 40 °C
Displays/controls	
Power-on indication	LED, Green
Switching state	LED, Yellow

Wiring Diagram

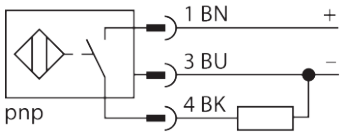

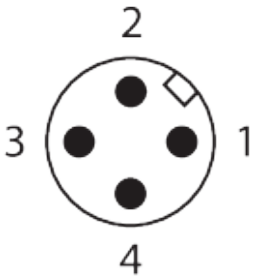

Functional principle

Inductive sensors are designed for wear-free and contactless detection of metal objects. uprox Factor 1 sensors have significant advantages due to their patented ferrite-coreless multi-coil system. They detect all metals at the same large switching distance and are resistant to magnetic fields.

| 10-07-2026 20:07 | Subject to technical changes |

Technical data

Other properties	
RoHs compatibility	yes

Assembly instructions

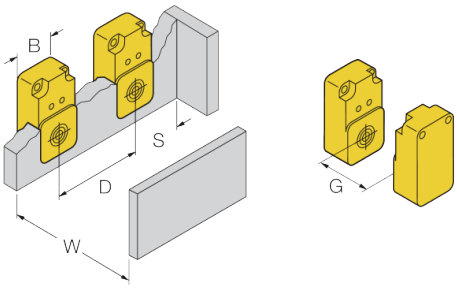

Distance D: 40 mm
Distance W: 15 mm
Distance S: 1 × B
Distance G: 30 mm
Width active area B: 20 mm

| 10-07-2026 20:07 | Subject to technical changes |