TL50BLGY2R1ALS4Q

LED signal light
Tower light

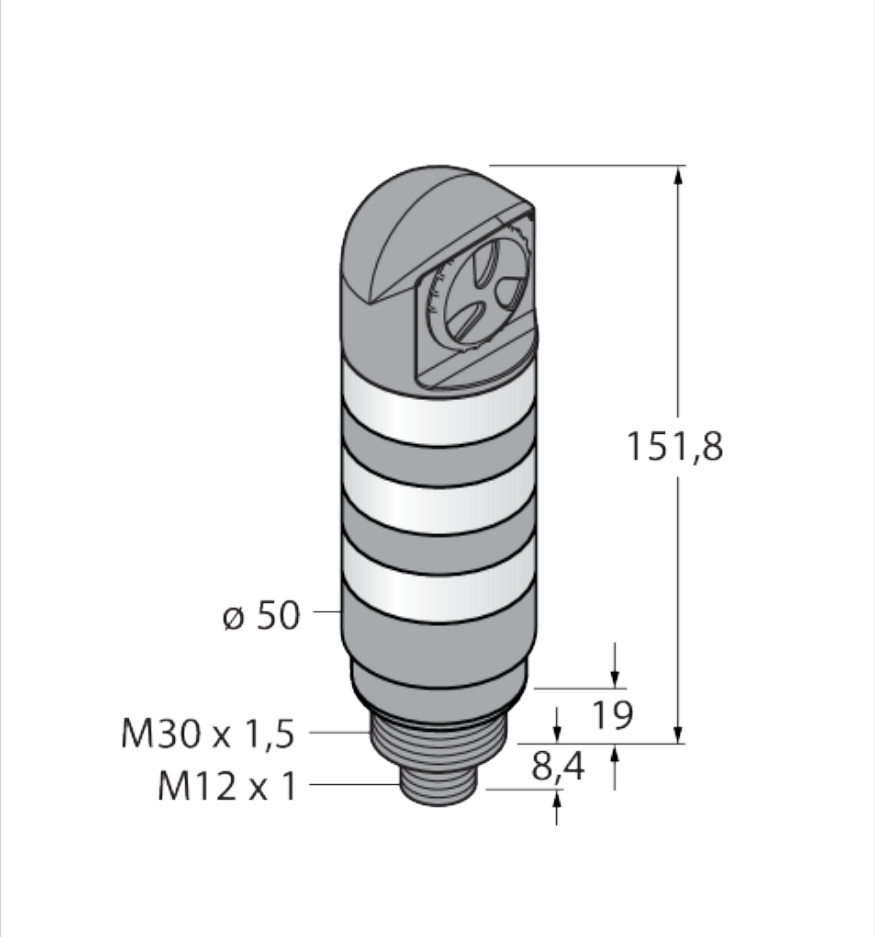

Type designation	TL50BLGY2R1ALS4Q
Ident-No.	3085108

Technical data

General data	
Purpose	LED indicator light
Signal and Display Data	
Features of color 1	Green, Permanently on, 52 lm
Features of color 2	Yellow, Flashing, 15 lm
Features of color 3	Red, Rotating, 24 lm
Acoustic signal	Staccato
Number of colors/segments	3

Features

- Plastic housing, black
- Protection class IP67
- Protection against electromagnetic and high-frequency interference
- Colors: Green (COL 1) / Yellow flashing (COL 2) / Red rotating (COL 3)
- Operating voltage: 12…30 VDC or 24 VAC with 45 mA per LED color
- Inputs: PNP/NPN
- Beeper: Sealed, stakkato max. 94 dB

| 18-09-2026 12:09 | Subject to technical changes |

Technical data

Volume	94 dB
Power supply	
Operating voltage U_B	21...27 VAC
Operating voltage U_B	12...30 VDC
Electrical data	
AC rated operational current	≤ 100 mA
Output function	4-wire
DC rated operational current	≤ 125 mA
Max. current consumption of beeper	35 mA
Max. current consumption per color	125 mA
Response time typical	<1 ms
Inputs	
Input type	Bipolar (PNP/NPN)22
Mechanical data	
Design	Smooth barrel
Construction type designation	TL50BL
	⌀ 50 mm
Dimensions	179,1 mm
Housing material	Plastic, ABS, Black
Electrical connection	Connector, M12 x 1
Cascadable	No
Window material	Polycarbonate, clear
Cable	
Core cross-section	5
Cable Jacket Material	PVC
Ambient conditions	
Ambient temperature	-20...+50 °C
Relative humidity	0...95 %
Protection class	IP67
Tests/approvals	
Approvals	CE, UL listed
Displays/controls	
Dimmable	No

Functional principle

The rugged multifunction TL50 beacons are available in many variations and are easily mounted. They can be assembled from up to four varicolored LEDs, with or without a beeper. Different lighting functions are also possible. In the type code, the lighting function is indicated after the color (without number: steady; 1: rotating; 2: flashing). Clearly visible status displays for indoor and outdoor applications.
The wiring diagram shows a PNP pin assignment.
Five colors are available: blue (B), green (G), red (R), yellow (Y) and white (W). The light sequence from bottom to top is specified in the type designation of the tower light.
Example: TL50GYRQ, designates the colors green, yellow and red from bottom to top.

| 18-09-2026 12:09 | Subject to technical changes |

Mounting accessories

SMB30A	3032723
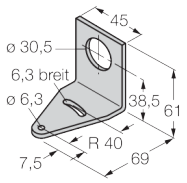	Mounting bracket, rectangular, stainless steel, for sensors with 30-mm thread

SMB30FA	3074005
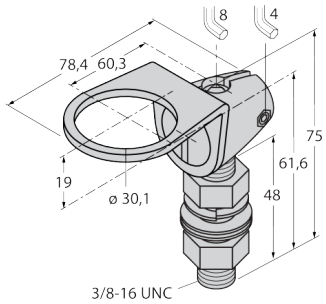	Mounting bracket; material VA 1.4401

SMB30SC	3052521
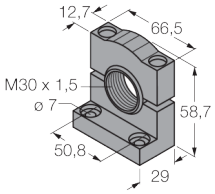	Mounting bracket, PBT black, for sensors with 30 mm thread, rotatable

Connection accessories

RKC4.5T-2/TEL	6625016
	Connection cable, M12 female connector, straight, 5-pin, cable length: 2 m, jacket material: PVC, black; cULus approval

WKC4.5T-2/TEL	6625028
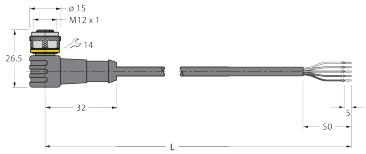	Connection cable, M12 female connector, angled, 5-pin, cable length: 2 m, jacket material: PVC, black; cULus approval

| 18-09-2026 12:09 | Subject to technical changes |