DX80N2Q45VT

Radio Transmission System

Basic device for type QM42VT1 vibration and temperature sensors
Node for Connecting External Sensors

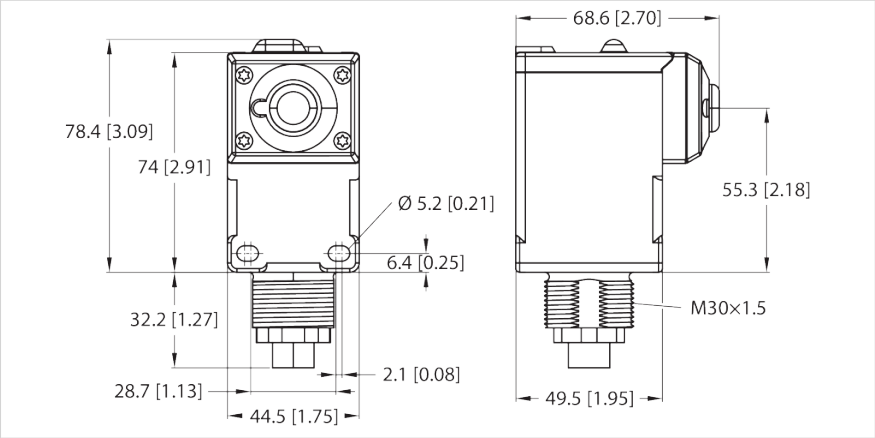

Type designation	DX80N2Q45VT
Ident-No.	3088439

Technical data

General data	
Device type	Wireless sensor
Special features	wireless
Detection area/measuring range	
Range	1000000 mm
Radio data	
Channel width	2 MHz
Installation	stationary
Number of radio channels	27
Output power EIRP	18 dB/65 mW
Output power ERP	18 dB/65 mW
Single-Carrier Residence Time	7,8 ms
Spread spectrum technology	FHSS (Frequency Hopping Spread Spectrum)
Topology	Star topology
Type of radio	short-range
Power supply	
Operating voltage U_B	3.6...5,5 VDC

Features

- Protection class IP67
- Mechanical screw-in thread M30 × 1.5
- Connection via M12 × 1 female connector, 4-pin
- Integrated multi-color indicator light
- 2.4 GHZ frequency band
- Frequency hopping (FHSS)
- Time Division Multiplex Access (TDMA)
- Operating voltage: 3.6…5.5 VDC
- Current consumption: ≤ 100 µA
- Supply via 2x 3.6 V Li-ion AA batteries, supplied with the device
- FCC-ID UE300DX80-2400- This device complies with FCC para. 15, subpara. C, 15.247 ETSI/EN: In compliance with EN 300 328: V1.7.1 (2006-05)IC: 7044A-DX8024
- Radiation protection 10 V/m for 80… 2700 MHz acc. to EN 61000-6-2

| 02-07-2026 02:07 | Subject to technical changes |

Technical data

Electrical data	
Output function	4-pin
Short-circuit protection	yes
Wire break/reverse polarity protection	yes
DC rated operational current	≤ 0,1 mA
Frequency band	2.4-GHz ISM band
Frequency range	2.402…2.483 GHz
Response time typical	<250 ms
runs with battery	Yes
Interfaces	
Communication protocol	1-wire-serial
Inputs	
Input type	Vibration/temperature
Digital inputs	
Number of channels	1/1
Outputs	
Output type	4-color LED indicator
Digital outputs	
Number of channels	4
Mechanical data	
Design	Rectangular
Construction type designation	Q45
Dimensions	68,6 mm x 44,5 mm x 110,6 mm
Housing material	Plastic, PBT Lexan, Black
Cover	Lexan
Electrical connection	Connector, M12 x 1
Antenna connection	Internal (wire loop)
Ambient conditions	
Ambient temperature	-40...+70 °C
Storage temperature	-40…+70 °C
Relative humidity	0...90 %
Protection class	IP67
Tests/approvals	
Approvals	CE, cURus, CSA
MTTF	67 Years acc. to SN 29500 (Ed. 99) 40 °C

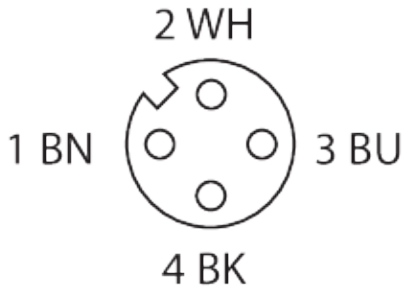

Functional principle

The Q45 wireless nodes can be integrated into a DX80 wireless network in star topology. Thanks to the integrated battery, these devices work fully autonomously and can be connected directly with any DX80 gateway or DXM controller. Some models include a sensor element or can be connected to external sensors or other transducers. Depending on the type of operation, the battery service life may last several years.
Conforms to EN 300 328: V2.2.2 (2019-02)

| 02-07-2026 02:07 | Subject to technical changes |

Technical data

Displays/controls	
Error indication	LED, red
Excess gain indication	LED, red
Power-on indication	LED, Green

Functional accessories

QM30VT1	3806275

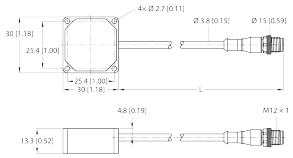

| 02-07-2026 02:07 | Subject to technical changes |