BI1.5U-EG08-AP6X

Inductive Sensor

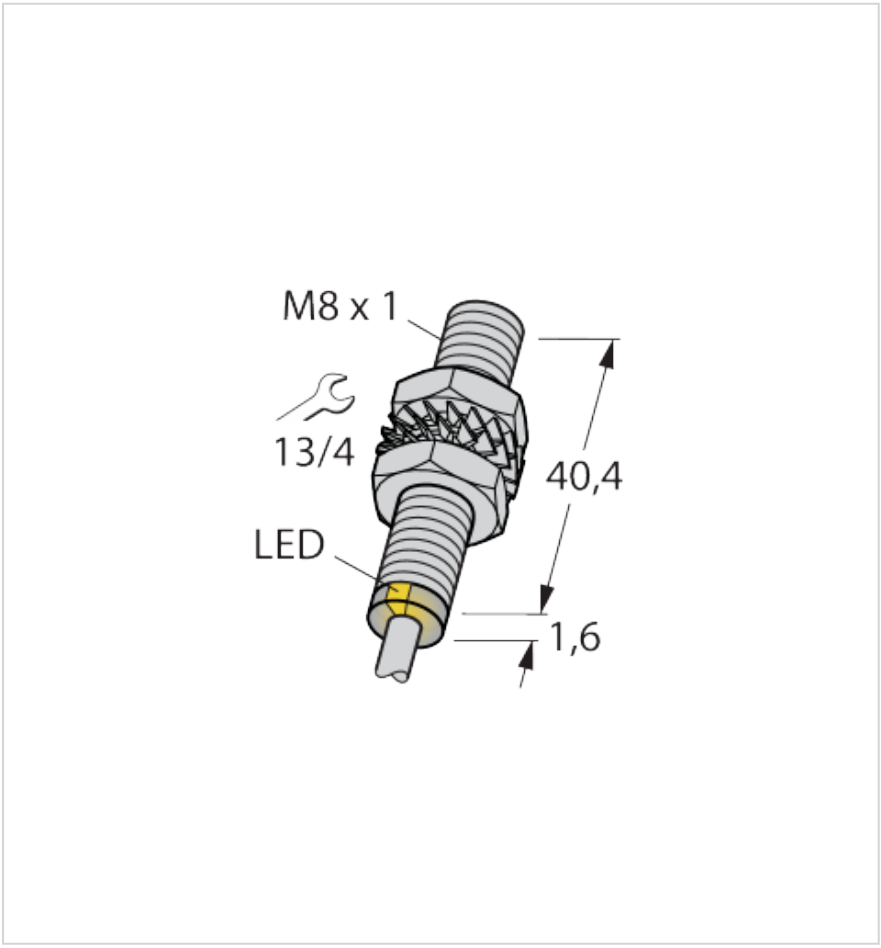



Type designation	BI1.5U-EG08-AP6X
Ident-No.	4600500

Technical data

Application area	
Magnetic field immune	Immune to magnetic AC and DC fields
Detection area/measuring range	
Rated switching distance	1,5 mm
Secured operating distance	≤ (0.81 × Sn) mm
Power supply	
Operating voltage U_B	10...30 VDC
Voltage drop at I_e	≤ 1,8 V

Features

- M8 × 1 threaded barrel
- Stainless steel, 1.4427 SO
- Factor 1 for all metals
- Protection class IP68
- Resistant to magnetic fields
- Extended temperature range
- High switching frequency
- DC 3-wire, 10…30 VDC
- NC, PNP output
- Cable connection

| 20-10-2026 07:10 | Subject to technical changes |

Technical data

Electrical data	
AC field stability	200 mT_{SS}
No-load current	15 mA
Output function	3-wire, normally open NO, PNP
Short-circuit protection	yes/Cyclic
Wire break/reverse polarity protection	yes/Complete
DC field stability	200 mT
DC rated operational current	≤ 150 mA
Insulation class	II
Isolation test voltage	≤ 0,5 kV
Residual current	≤ 0,1 mA
Residual ripple	≤ 10 % U_{ss}
Switching frequency	2 kHz
Accuracy/deviation	
Hysteresis	3 % v. E...15 % v. E.
Temperature drift	10 %
Repeat accuracy	≤ 2 % v. E.
	≤ ± 15 %, ≤ -25 °C v ≥ +70 °C
Mechanical data	
Design	Threaded barrel, M8 x 1
Construction type designation	EG08
	⌀ 8 mm
Housing material	Stainless steel, 1.4427 SO
Active area material	Plastic, PA12-GF30
End cap	Plastic, PA12-GF30
Max. tightening torque of housing nut	5 Nm
Electrical connection	Cable
Pressure resistant	no
Thread length	40,4 mm
Thread size	M8 × 1
Mounting conditions	Flush
Cable	
Cable length	2 m
Cable length	2 m
Core cross-section	3 x 0,25 mm²
Cable type	LifYY-11Y
External Diameter of the Cable	Ø 4 mm

Wiring Diagram

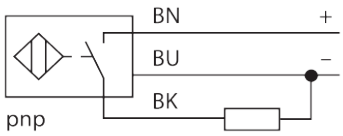

Functional principle

Inductive sensors are designed for wear-free and contactless detection of metal objects. uprox Factor 1 sensors have significant advantages due to their patented ferrite-coreless multi-coil system. They detect all metals at the same large switching distance and are resistant to magnetic fields.

| 20-10-2026 07:10 | Subject to technical changes |

Technical data

Cable Jacket Material	PUR
Ambient conditions	
Ambient temperature	-30...+85 °C
Pollution degree	3
Shock resistance	30 g (11 ms)
Vibration resistance	55 Hz (1 mm)
Protection class	IP68
Tests/approvals	
MTTF	874 Years acc. to SN 29500 (Ed. 99) 40 °C
Displays/controls	
Switching state	LED, Yellow
Other properties	
RoHs compatibility	yes

Assembly instructions

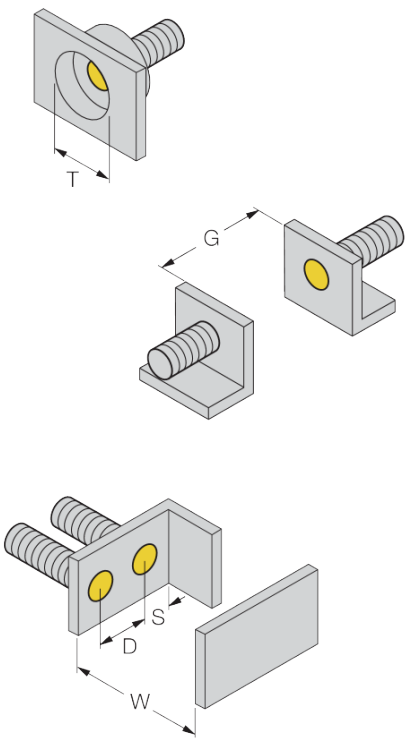

Distance D: 2 x B
Distance W: 3 x Sn
Distance T: 3 x B
Distance S: 1.5 x B
Distance G: 6 x Sn
Diameter active area B: 8 mm

| 20-10-2026 07:10 | Subject to technical changes |

Mounting accessories

QM-08	6945100
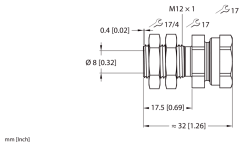	Quick-mount bracket with dead-stop; material: chrome-plated brass. Male thread M12 × 1. Note: The switching distance of the proximity switches may reduce when using quick-mount brackets.

BST-08B	6947210
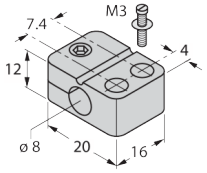	Mounting bracket for threaded barrel sensors, with dead-stop; material: PA6

MW08	6945008
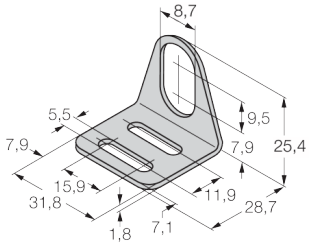	Mounting bracket for threaded barrel sensors; material: Stainless steel A2 1.4301 (AISI 304)

BSS-08	6901322
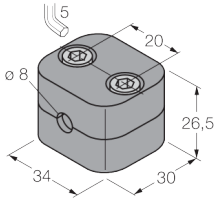	Mounting bracket for smooth and threaded barrel sensors; material: Polypropylene

MBS80	69479
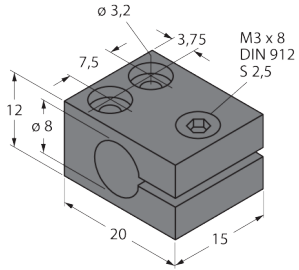	Mounting bracket for smooth barrel sensors; mounting block material: Anodized aluminum

| 20-10-2026 07:10 | Subject to technical changes |