BIM-NST-AP6X-H1141

Magnetic Field Sensor
For Pneumatic Cylinders

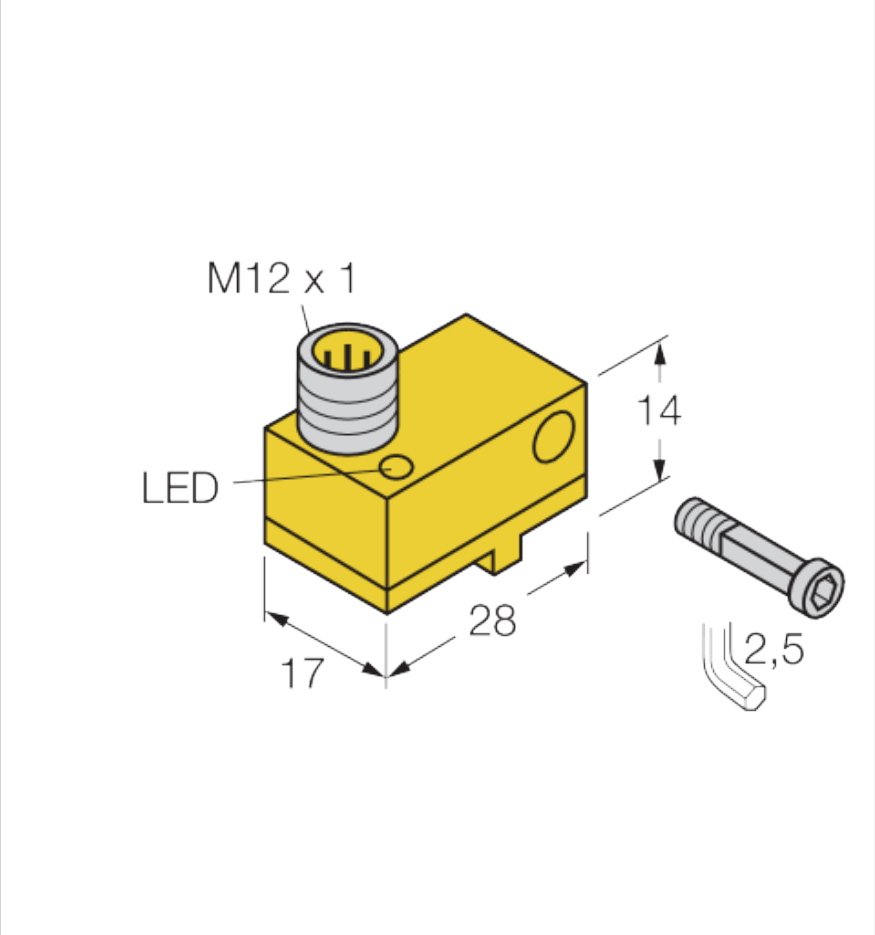

Typ	BIM-NST-AP6X-H1141
Ident-No.	4685400

Features

- Plastic, PA12-GF30
- Magnetic-inductive sensor
- DC 3-wire, 10…30 VDC
- NO, PNP output
- Connector, M12 × 1

Technical data

General data	
Pass speed	≤ 10 m/s
Sensor shape fitting to cylindrical housing	profile cylinder (dovetail groove, T-groove [e.g. Festo], [e.g. SMC])
Power supply	
Operating voltage U_B	10...30 VDC
Voltage drop at I_e	≤ 1,8 V
Electrical data	

| 14-06-2026 18:06 | Subject to technical changes |

Technical data

No-load current	15 mA
Output function	3-wire, NO contact, PNP
Short-circuit protection	yes/Cyclic
Wire break/reverse polarity protection	yes/Complete
DC rated operational current	≤ 200 mA
Isolation test voltage	≤ 0,5 kV
Residual current	≤ 0,1 mA
Residual ripple	≤ 10 % U_{SS}
Switching frequency	1 kHz
Accuracy/deviation	
Hysteresis	≤ 1 mm
Repeatability	≤ ±0,1 mm
Temperature drift	≤ 0,1 mm
Mechanical data	
Design	Rectangular, NST
Construction type designation	NST
Dimensions	28 mm x 17 mm x 14 mm
Housing material	Plastic, PA12-GF30
Active area material	Plastic, PA12-GF30
Electrical connection	Connector, M12 x 1
Mounting on the following profiles	
Number of pins	4
Ambient conditions	
Ambient temperature	-25...+70 °C
Pollution degree	3
Shock resistance	30 g (11 ms)
Vibration resistance	55 Hz (1 mm)
Protection class	IP67
Tests/approvals	
MTTF	2283 Years acc. to SN 29500 (Ed. 99) 40 °C
Displays/controls	
Switching state	LED, Yellow
Other properties	
RoHs compatibility	yes
Comments	
Included in delivery	1 x screw M3x20, 1 x tension bolt, 1 x spring washer

Wiring Diagram

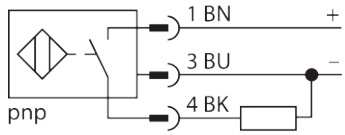

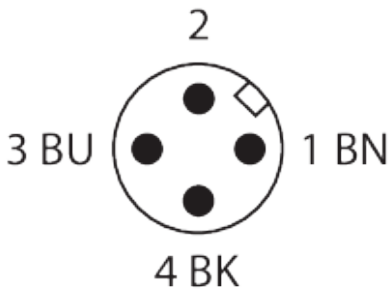

Functional principle

Magnetic field sensors are activated by magnetic fields and are used, in particular, for the detection of the piston position in pneumatic cylinders. As magnetic fields can permeate non-magnetizable metals, the sensors can detect a permanent magnet attached to the piston through the aluminum cylinder wall.

| 14-06-2026 18:06 | Subject to technical changes |

Assembly instructions

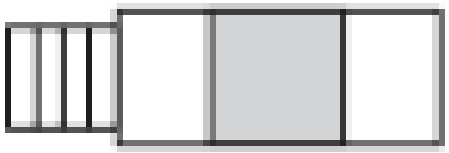

Installation information:
Aktive Fläche in der Mitte der Unterseite,

Mounting accessories

KLN3	6970504
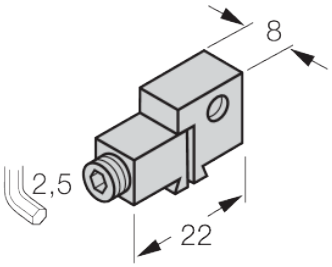	Mounting bracket for mounting magnetic field sensors on □ dovetail groove cylinders or □ T-groove cylinders; clamping width: 5.2…13.5 mm; material: anodized aluminum

KLF1	6970401
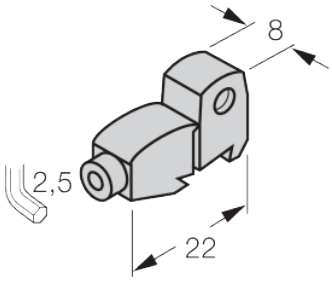	Mounting bracket for mounting magnetic field sensors on □ profile cylinders with external dovetail guide; for all cylinder diameters, material: anodized aluminum

KLF2	6970402
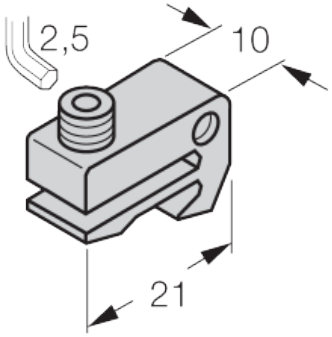	Mounting bracket for mounting magnetic field sensors on □ profile cylinders (IMI Norgren); cylinder diameter: 32… 100 mm; material: anodized aluminum

SMC-325	A3106
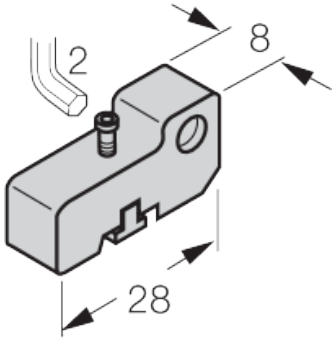	Mounting bracket for mounting magnetic field sensors on □ SMC cylinders; clamping width 4 mm; material: anodized aluminum

| 14-06-2026 18:06 | Subject to technical changes |