BIM-UNT-AP6X-0.3-RS4/S1139

Magnetic Field Sensor
For Pneumatic Cylinders

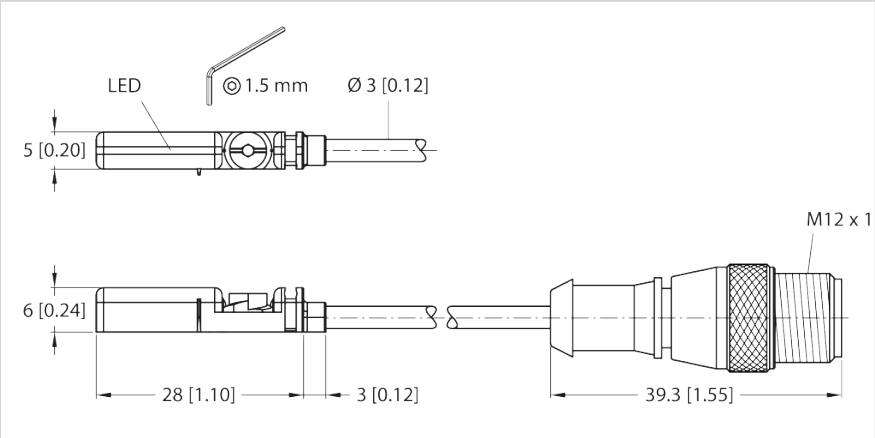

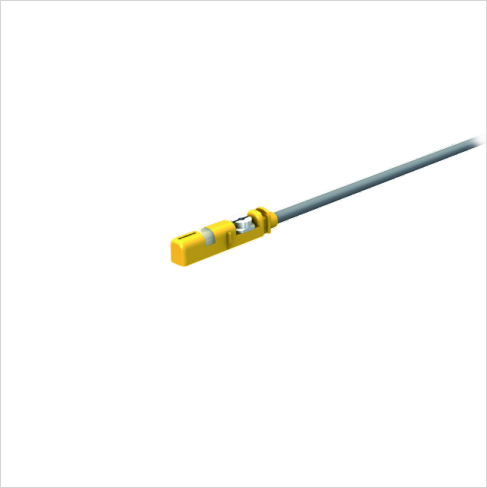

Typ	BIM-UNT-AP6X-0.3-RS4/S1139
Ident-No.	4685731

Technical data

General data	
Pass speed	≤ 10 m/s
Sensor shape fitting to cylindrical housing	profile cylinder (T-groove [e.g. Festo]), round cylinder
Power supply	
Operating voltage U_B	10...30 VDC
Voltage drop at I_e	≤ 1,8 V
Electrical data	
No-load current	15 mA
Output function	3-wire, NO contact, PNP
Short-circuit protection	yes/Cyclic
Wire break/reverse polarity protection	yes/Complete
DC rated operational current	≤ 150 mA
Isolation test voltage	≤ 0,5 kV
Residual current	≤ 0,1 mA
Residual ripple	≤ 10 % U_{SS}
Switching frequency	1 kHz
Accuracy/deviation	
Hysteresis	≤ 1 mm

Features

- For T-groove cylinders without mounting accessories
- Optionally available accessories for mounting on other cylinder types
- One-hand mounting possible
- Stable mounting
  - Magneto-resistive sensor
  - Long overtravel
  - For large cylinders
  - DC 3-wire, 10…30 VDC
  - NO, PNP output
  - Pigtail with male end M12 × 1

Wiring Diagram

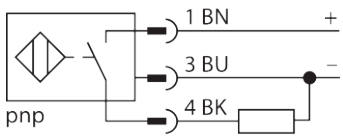

Functional principle

Magnetic field sensors are activated by magnetic fields and are used, in particular, for the detection of the piston position in

| 14-06-2026 18:06 | Subject to technical changes |

Technical data

Repeatability	≤ ±0,1 mm
Temperature drift	≤ 0,1 mm
Mechanical data	
Design	Rectangular, UNT
Construction type designation	UNT
Dimensions	28 mm x 5 mm x 6 mm
Housing material	Plastic, PP
Active area material	Plastic, PP
Electrical connection	Cable with connector, M12 x 1
Mounting on the following profiles	
Number of pins	4
Tightening torque fixing screw	0,4 Nm
Cable	
Cable length	0,3 m
	Suited for E-ChainSystems® acc. to manufacturers declaration H1063M
Cable jacket	Gray
Core cross-section	3 x 0,14 mm²
Cable type	Lif9Y-11Y
External Diameter of the Cable	Ø 3 mm
Cable Jacket Material	PUR
Ambient conditions	
Ambient temperature	-25...+70 °C
Pollution degree	3
Shock resistance	30 g (11 ms)
Vibration resistance	55 Hz (1 mm)
Protection class	IP68
Tests/approvals	
MTTF	2283 Years acc. to SN 29500 (Ed. 99) 40 °C
Displays/controls	
Switching state	LED, Yellow
Other properties	
RoHs compatibility	yes
Comments	
Included in delivery	cable clip
Special version	S1139 = Long overtravel

pneumatic cylinders. As magnetic fields can permeate non-magnetizable metals, the sensors can detect a permanent magnet attached to the piston through the aluminum cylinder wall.

| 14-06-2026 18:06 | Subject to technical changes |

Assembly instructions

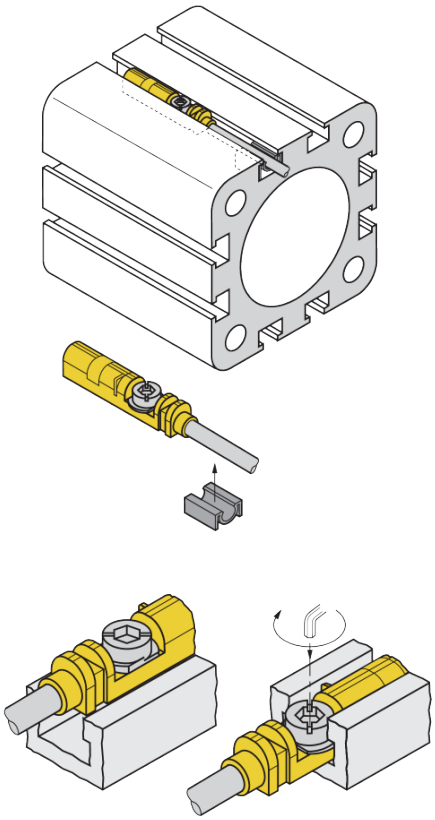

Installation information:
Insert the sensor in the groove from above. Mount the sensors as follows using the patented wing screw: The wing screw features a left-hand female thread. Two small plastic lips keep the screw in position, ready-to-install. Turn the screw clockwise. The screw moves out of the thread and hits the upper grooves with the wings. The sensor is thus pressed down and locked. A few degrees up to approximately 1.5 turns of the screw with a slotted screwdriver (blade width 0.5 mm) or a 1.5 mm Allen key are sufficient to ensure vibration-proof fastening, depending on the shape of the slot. The permissible tightening torque of 0.4 Nm is sufficient for safe mounting without damaging the cylinder. The sensor now withstands axial and radial tensile load of F=100N applied on the cable. Cable clips are included in the scope of delivery. They enable smooth cable routing in the groove. The correspondent accessories for mounting on other cylindrical housings has to be ordered separately.

Mounting accessories

KLZCD2-UNT	6970418
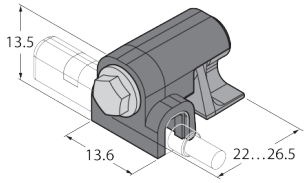	Mounting bracket for mounting magnetic field sensors for T-grooves on a CleanDesign cylinder with mounting rail

KLZ1-INT	6970410
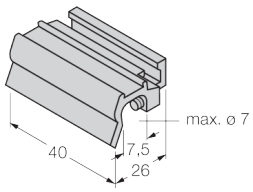	Accessories for mounting BIM-INT and BIM-UNT sensors on □ tie-rod cylinders; cylinder diameter: 32...40 mm; material: Aluminum; further mounting accessories for other cylinder diameters on request

| 14-06-2026 18:06 | Subject to technical changes |

Mounting accessories

KLZ2-INT	6970411
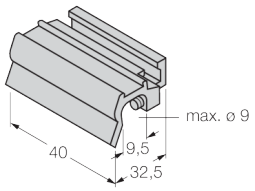	Accessories for mounting BIM-INT and BIM-UNT sensors on □ tie-rod cylinders; cylinder diameter: 50...63 mm; material: Aluminum; further mounting accessories for other cylinder diameters on request

UNT-STOPPER	4685751
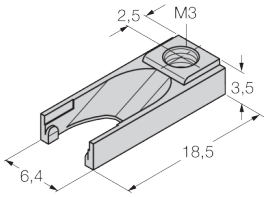	Accessories to secure the switching point on □ T-groove cylinders; snap-lock mounting in the BIM-UNT sensor fixture; material: Plastic

KLRC-UNT1	6970626
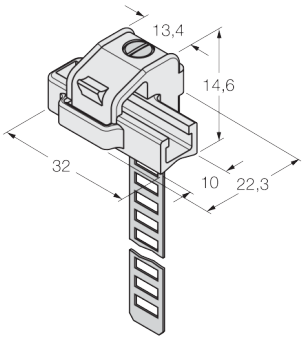	Mounting bracket for mounting magnetic field sensors on □ round cylinders; cylinder diameter: 8...25 mm; material: PA 6I/6T / nickel silver; fire-hazard classification acc. to UL94 - V2

KLRC-UNT2	6970627
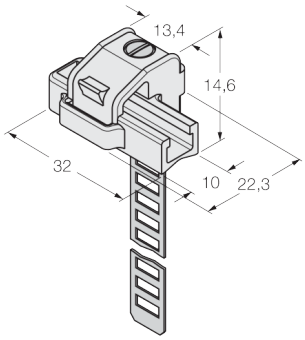	Mounting bracket for mounting magnetic field sensors on □ round cylinders; cylinder diameter: 25...63 mm; material: PA 6I/6T / nickel silver; fire-hazard classification acc. to UL94 - V2

KLRC-UNT3	6970628
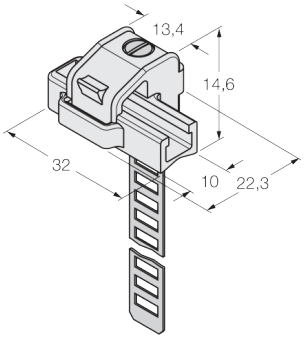	Mounting bracket for mounting magnetic field sensors on □ round cylinders; cylinder diameter: 63...130 mm; material: PA 6I/6T / nickel silver; fire-hazard classification acc. to UL94 - V2

KLRC-UNT4	6970629
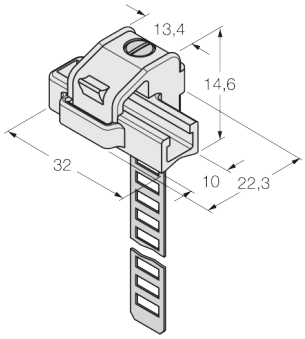	Mounting bracket for mounting magnetic field sensors on □ round cylinders; cylinder diameter: 130...250 mm; material: PA 6I/6T / nickel silver; fire-hazard classification acc. to UL94 - V2

KLDT-UNT2	6913351
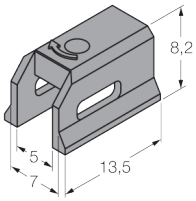	Mounting bracket for mounting magnetic field sensors on □ dovetail groove cylinders; groove width: 7 mm; material: PPS

KLDT-UNT3	6913352
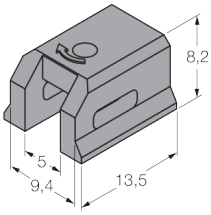	Mounting bracket for mounting magnetic field sensors on □ dovetail groove cylinders; groove width: 9.4 mm; material: PPS

| 14-06-2026 18:06 | Subject to technical changes |

Mounting accessories

KLDT-UNT6	6913355
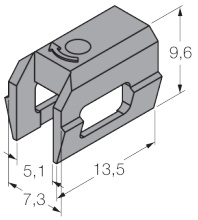	Mounting bracket for mounting magnetic field sensors on □ dovetail groove cylinders; groove width: 7.35 mm; material: PPS

| 14-06-2026 18:06 | Subject to technical changes |