KLRC-UNT3

Mounting Accessories
Mounting Bracket
For Mounting UNT Magnetic Field Sensors

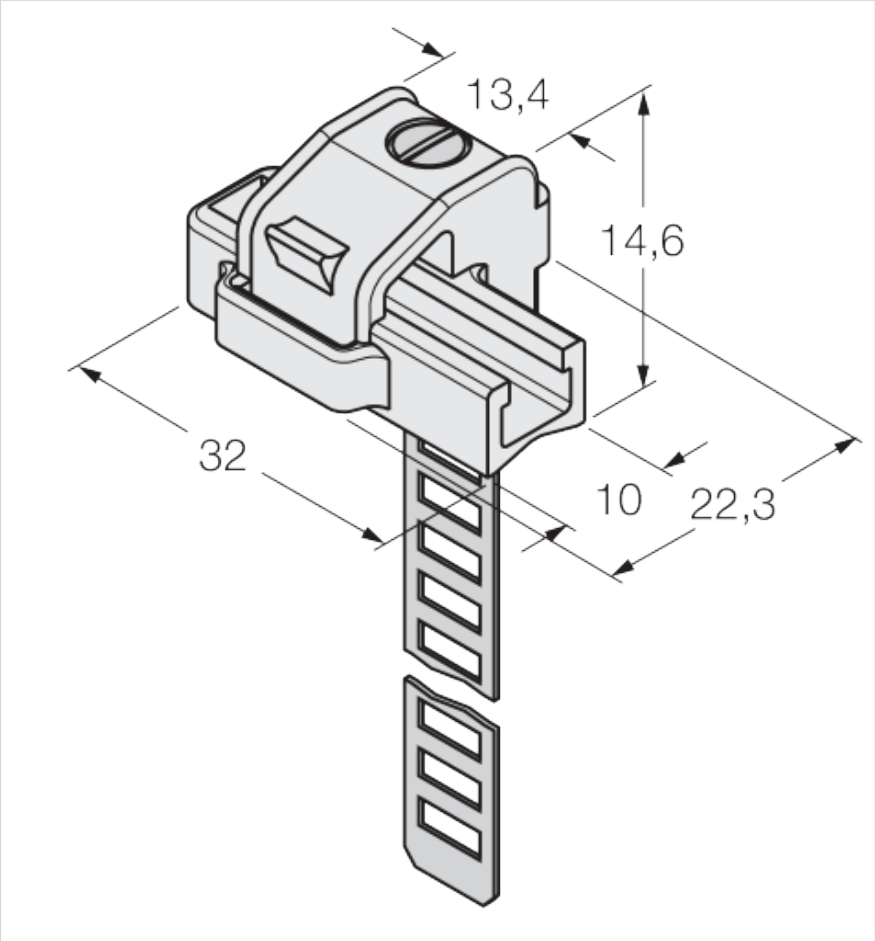

Type designation	KLRC-UNT3
Ident-No.	6970628

Technical data

General data	
Mounting accessories for	Magnetic field sensors
Mechanical data	
Design	Accessories
Construction type designation	KLRC-UNT3
Dimensions	32 mm x 22,3 mm x 14,6 mm
Housing material	Metal/plastic, PA 6I/6T/Nickel silver

Features

- Mounting on round cylinders
- Cylinder diameter: 63…130 mm
- Material: PA 6I/6T/nickel silver
- Fire classification acc. to UL94 — V2

| 03-07-2026 13:07 | Subject to technical changes |

Technical data

Fixing clamp for correspondent cylinder diameter	63...130 mm

Assembly instructions

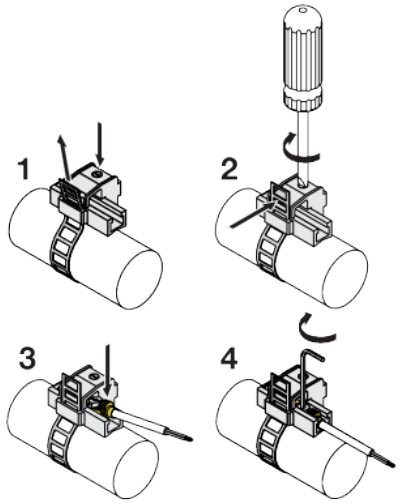

Installation information:

1. Loosen the screw on the mounting clamp. Place the tensioning strap around the cylinder and insert it into the slot of the mounting clamp from below.
2. Tighten the screw on the mounting clamp (slotted screwdriver, blade thickness 0.5 mm) to secure the mounting clamp.
3. Insert the sensor into the groove of the mounting clamp.
4. Secure the sensor with a max. torque of 0.4 Nm.

   For cylinders with a diameter of 63… 130 mm.

| 03-07-2026 13:07 | Subject to technical changes |